Eskom	Scope of Work	Camden Power Station

Title: **Scope of Work for the Manufacturing, Supply, Delivery and after-sales Technical Support of Low-Pressure System Pipes and Fittings**

Document Identifier:	**559-70550355**
Alternative	**N/A**
Reference Number:	
Area of Applicability:	**Auxiliary Engineering**
Functional Area:	**Maintenance**
Revision:	**02**
Total Pages:	**21**
Next Review Date:	**N/A**
Disclosure Classification:	**Controlled Disclosure**

Compiled by	Functional Responsibility	Authorized by
TMwandla		
T. Mwandla	**O. Tilodi**	**M. Shaku**
Auxiliary Engineer	**Auxiliary Plant Engineering Manager**	**Group Engineering Manager**
Date: 28/07/2026	Date: 29/07/2026	Date: 31/07/2026

Table of Contents

1. Introduction 3
2. Supporting Clauses 3
2.1 Scope 3
2.1.1 Purpose 3
2.1.2 Applicability 3
2.1.3 Effective date 3
2.2 Normative/Informative References 3
2.2.1 Normative 3
2.2.2 Informative 3
2.3 Definitions 4
2.4 Abbreviations 4
2.5 Roles and Responsibilities 4
2.5.1 Common Plant Engineering 4
2.5.2 Common Plant Maintenance 4
2.5.3 Procurement 5
2.5.4 Materials Management (Stores) 5
2.6 Process for Monitoring 5
2.7 Related/Supporting Documents 5
3. Scope of Work 5
3.1 Supplier's requirements 5
4. Acceptance 7
5. Revisions 8
6. Development Team 8
7. Acknowledgements 8
Appendix A – Eskom Document Hierarchy 9

CONTROLLED DISCLOSURE

When downloaded from the document management system, this document is uncontrolled and the responsibility rests with the user to ensure it is in line with the authorized version on the system. No part of this document may be reproduced in any manner or form by third parties without the written consent of Eskom Holdings SOC Ltd, © copyright Eskom Holdings SOC Ltd, Reg No 2002/015527/30

1. Introduction

The availability of spare is the paramount importance for effective plant maintenance. Low pressure system pipes and fittings are required to ensure the availability, redundancy and reliability of the plant. It is essential that a period of forty-eight (48) months' contract is established on an as and when required basis in ensuring spares availability to improve the plant availability.

2. Supporting Clauses

2.1 Scope

The scope of work specifies the required spares specifications, quantities of spares to be supplied by the supplier, supplier requirements and conditions for acceptance.

2.1.1 Purpose

The purpose of this document is to provide a detailed scope of work to establish a contract with the supplier for the manufacturing, supply, delivery and aftersales technical support of spares on an "as and when required basis". The scope covers all listed maintenance spares in Appendix A which are required to be manufactured, supplied and delivered on time to Camden Power Station. These spares must meet the required specifications.

2.1.2 Applicability

- Common Plant Engineering
- Common Plant Maintenance

2.1.3 Effective date

See date of authorized signature

2.2 Normative/Informative References

2.2.1 Normative

- ISO 9001 Quality Management Systems
- OHSA – Occupational Health and Safety Act 85 of 1993

2.2.2 Informative

- 240-105020315 Eskom Standard for Low Pressure System
- 240-76960420 Guideline for Spares Procurement Technical Evaluation and Quality Inspection
- 32-1033 Eskom Procurement and Supply Chain Management Policy
- 32-1034 Eskom Procurement and Supply Chain Management Procedure

CONTROLLED DISCLOSURE

When downloaded from the document management system, this document is uncontrolled and the responsibility rests with the user to ensure it is in line with the authorized version on the system. No part of this document may be reproduced in any manner or form by third parties without the written consent of Eskom Holdings SOC Ltd, © copyright Eskom Holdings SOC Ltd, Reg No 2002/015527/30

2.3 Definitions

Definition	Explanation
Supplier	Entity supplying the final product to the client.
Quality Control Plan	A document specifying the activities to be inspected throughout the execution of the project, inclusive of test methods, procedures and acceptance criteria.

2.4 Abbreviations

Abbreviation	Explanation
DCF	Data Capture Form
ISO	International Organization for Standardization
OEM	Original Equipment Manufacture

2.5 Roles and Responsibilities

2.5.1 Common Plant Engineering

- Compile scope of work.
- Ensure that the scope of work is in accordance with Eskom policies and procedures.
- Provide all necessary information to assist in spares procurement.
- Participate in technical tender evaluation of the tender submissions.
- Provide technical assistance to Materials Management and Procurement Departments during the execution of this Works Information.
- Perform Quality Checks on procured spares and accompanying documentation.

2.5.2 Common Plant Maintenance

- Oversee the inspection of spares on delivery and ensure that Materials Management keeps spares at required levels.
- Perform inspections and QC on spares upon delivery.
- Ensure spare items are stored properly by Materials Management as per relevant storage recommendations by the specific manufacturers.
- Completion of Data Capture Forms (DCF) for equipment not having stock numbers.

CONTROLLED DISCLOSURE

When downloaded from the document management system, this document is uncontrolled and the responsibility rests with the user to ensure it is in line with the authorized version on the system. No part of this document may be reproduced in any manner or form by third parties without the written consent of Eskom Holdings SOC Ltd, © copyright Eskom Holdings SOC Ltd, Reg No 2002/015527/30

2.5.3 Procurement

- Execute procurement of the spares as per procurement processes.
- Set up clarification meetings between Supplier and Employer.
- Act as communication link between Supplier and Employer.
- Ensure all necessary payments are executed timeously and keep record thereof.
- Arrange technical evaluation sessions.
- Compile and present mandate to negotiate and arrange negotiation meetings when required.
- Keep record of all tender documentation.

2.5.4 Materials Management (Stores)

- Make provision for storage of procured spares.
- Work together with engineering and maintenance when accepting spares into stores.

2.6 Process for Monitoring

N/A

2.7 Related/Supporting Documents

N/A

3. Scope of Work

The scope of work for the manufacturing, supply and delivery includes all the listed pipes and fittings spares on Appendix A for duration of 48 months.

The supply of spares will be on an as and when required a purchase order will be placed with the supplier requesting a number of spares required by the employer. Each spare is identifiable by means of material number, description and quantities.

(Note: The quantities are estimated number of spares required therefore might not be exactly the number of spares delivered through the duration of the contract. The spares will be delivered only as and when the spares are required)

This scope of work stipulates all the requirements from the supplier to the employer. The process is to be followed in acceptance of the spares, packaging.

3.1 Supplier's requirements

The following are the Supplier's requirements:

- Manufactures, supplies and delivers spares as requested by the Employer through an order number

When downloaded from the document management system, this document is uncontrolled and the responsibility rests with the user to ensure it is in line with the authorized version on the system. No part of this document may be reproduced in any manner or form by third parties without the written consent of Eskom Holdings SOC Ltd, © copyright Eskom Holdings SOC Ltd, Reg No 2002/015527/30

- The spare must be to the exact same specification as installed in the plant and specified in this scope of work
- The contractor to fully comply with Eskom Standard for Low Pressure system (240-105020315)
- The Supplier will ensure that the correct spare is supplied and will be liable for damage at his/her cost if the incorrect or defective spare/s is supplied and Eskom will issue a non-conformance to the contractor. If a damaged item is delivered, it is the responsibility of the contractor or supplier to replace/correct the item deficiencies, at the contractor's own cost
- The Employer's (i.e. Eskom Holdings SOC) acceptance of delivered spare/s does not absolve the Supplier of the liability to supply the correct and/or defect free spare
- The Supplier may, at the Employer's discretion, be given access to the plant to verify the information of the installed spare
- The Supplier will supply any additional information such as brochure, general arrangement drawing, certificates, detailed specification and datasheets where applicable
- The Supplier shall provide aftersales technical support as required
- The Supplier shall supply preservation and storage procedure/s, where applicable
- Timeously inform the Employer of any delays or when outstanding or additional information from the Employer if required
- Responsible to ensure that a quality products are delivered
- Responsible to ensure that every effort is made to keep to the agreed program and plan.
- The Supplier must provide copies of material certificates type 3.1 to EN10204 for scrutiny to the Employer before delivery
- Invite the Employer or representative three (3) working days in days in advance for witness/hold points, if applicable, as agreed

CONTROLLED DISCLOSURE

When downloaded from the document management system, this document is uncontrolled and the responsibility rests with the user to ensure it is in line with the authorized version on the system. No part of this document may be reproduced in any manner or form by third parties without the written consent of Eskom Holdings SOC Ltd, © copyright Eskom Holdings SOC Ltd, Reg No 2002/015527/30

4. Acceptance

This document has been seen and accepted by:

Full Name and Surname	Designation
Oscar Tilodi	Auxiliary Engineering Manager
Sizwe Mabele	Auxiliary System Engineer
Natasha Naidu	Auxiliary System Engineer

CONTROLLED DISCLOSURE

When downloaded from the document management system, this document is uncontrolled and the responsibility rests with the user to ensure it is in line with the authorized version on the system. No part of this document may be reproduced in any manner or form by third parties without the written consent of Eskom Holdings SOC Ltd, © copyright Eskom Holdings SOC Ltd, Reg No 2002/015527/30

5. Revisions

Date	Rev.	Compiler	Remarks
October 2025	01	TA Mwandla	First issue for review
July 2026	02	TA Mwandla	Final issue

6. Development Team

The following people were involved in the development of this document:

- Sizwe Mabele
- Natasha Naidu
- Thobani Mwandla

7. Acknowledgements

N/A

CONTROLLED DISCLOSURE

When downloaded from the document management system, this document is uncontrolled and the responsibility rests with the user to ensure it is in line with the authorized version on the system. No part of this document may be reproduced in any manner or form by third parties without the written consent of Eskom Holdings SOC Ltd, © copyright Eskom Holdings SOC Ltd, Reg No 2002/015527/30

Appendix A – Eskom Document Hierarchy

A.1 Quantities

Material number	Description	UOM	Contract amount for 4 years
39071	Y-PIECE CASTING: TYPE: FORGING; DIMENSIONS: ID 300 X OD 346 X LG 990 MM; MATERIAL: CAST IRON; REFERENCE NO: 0.36/21209; MINIMUM OPERATING PRESSURE: 16 BAR; MINIMUM OPERATING TEMPERATURE: 23 DEG C; FLANGE THICKNESS: 1 0F 25 AND 2 0F 25; HOLES: 12; BOLTS: M20; MATERIAL: CAST IRON GRADE 17; PCD: 406 MM; CHEMICAL ANALYSIS %, C: 3.6, SI: 2.66, MN: 0.75, CR: 0.48, P: 0.046, S: 0.09; MUST BE SUPPLIED AS PER DRAWING 0.36/21209	ea	14
39068	LINER: TYPE: LIFTING; DIMENSIONS: DIA 570 MM X LG 1.175 M; MATERIAL: CI; SUPPL P/N: R33198; ID: 750 MM; LENGTH 1: 1175 MM; LENGTH 2: 900 MM; HEIGHT: 970 MM; THK: 23 MM; LINER MUST HAVE 4 TAPPED HOLES ON TOP FOR FASTENING THE SPINDLE PLATE; MUST BE SUPPLIED AS PER DRAWING 0.36/21209	ea	6
256842	PIPE, METALLIC: NOMINAL PIPE SIZE DESIGNATION: NB 300 MM; MATERIAL: MILD STEEL; LENGTH: 12 M; SPECIFICATION: SANS 719; CONSTRUCTION: SEAMLESS; MAXIMUM OPERATING PRESSURE: 16 BAR; SCHEDULE: 30	m	10044
707197	PIPE, METALLIC: NOMINAL PIPE SIZE DESIGNATION: NB 250 MM; MATERIAL: MILD STEEL; LENGTH: 12 M; MAXIMUM OPERATING PRESSURE: 16 BAR; SPECIFICATION: SANS 719; SCHEDULE: 20	ea	250
707198	PIPE, METALLIC: NOMINAL PIPE SIZE DESIGNATION: NB 400 MM; MATERIAL: MILD STEEL; LENGTH: 6 M; MAXIMUM OPERATING PRESSURE: 16 BAR; SPECIFICATION: SANS 719; CORROSION PROTECTION: CPS 03; SCHEDULE: 10	ea	270
707199	PIPE BEND, METALLIC: DIAMETER: NB 300 MM; CONNECTION: WELDED; MATERIAL: MILD STEEL; SPECIFICATION: SANS 719; DEGREE: 90 DEG; RADIUS: SHORT; MAXIMUM OPERATING PRESSURE: 16 BAR; SCHEDULE: 30	ea	150

Material number	Description	UOM	Contract amount for 4 years
250438	PIPE, METALLIC: NOMINAL PIPE SIZE DESIGNATION: NB 80 MM; MATERIAL: MILD STEEL; LENGTH: 6 M; CONSTRUCTION: SEAMLESS; END TYPE: MACHINED; SPECIFICATION: ASME B36.10; SCHEDULE: 40	ea	35
250434	PIPE, METALLIC: NOMINAL PIPE SIZE DESIGNATION: NB 100 MM; MATERIAL: MILD STEEL; LENGTH: 6 M; CONSTRUCTION: SEAMLESS; END TYPE: BEVELLED; SPECIFICATION: ASME B36.10; SCHEDULE: 40	ea	30
527426	PIPE, METALLIC: NOMINAL PIPE SIZE DESIGNATION: 6 IN; MATERIAL: SS GR 316; LENGTH: 6 M; WALL THICKNESS: 7.11 MM; CONSTRUCTION: SEAMLESS; MAXIMUM OPERATING PRESSURE: 3 MPA; SCHEDULE: 40; MAXIMUM OPERATING TEMP: 345 DEG C; GRADE: 316; THE MATERIAL CERTIFICATION MUST BE EN10204:2004 3.2	m	114
243238	PIPE, METALLIC: NOMINAL PIPE SIZE DESIGNATION: 100 MM; MATERIAL: STL GALV; LENGTH: 6 M; END TYPE: FLANGE 4 HOLES	ea	40
243239	PIPE, METALLIC: NOMINAL PIPE SIZE DESIGNATION: 150 MM; MATERIAL: GALVANISED STEEL; LENGTH: 6 M; SCHEDULE: 40; END TYPE: FLANGE; FLANGED AND DRILLED ACCORDING TO BS 1092-1 TABLE 12	ea	10
243237	PIPE, METALLIC: NOMINAL PIPE SIZE DESIGNATION: 200 MM; MATERIAL: GALVANISED STEEL; LENGTH: 6 M; END TYPE: FLANGE (8) HOLES; FLANGED AND DRILLED ACCORDING TO BS 1092-1 TABLE 12	ea	50
528362	PIPE, METALLIC: NOMINAL PIPE SIZE DESIGNATION: 200 MM; MATERIAL: GALVANISED STEEL; LENGTH: 9 M; SCHEDULE: 40; END TYPE: FLANGE; FLANGED AND DRILLED ACCORDING TO BS 1092-1 TABLE 12	m	54
528988	PIPE, METALLIC: NOMINAL PIPE SIZE DESIGNATION: 80 MM; MATERIAL: STAINLESS STEEL GR 316; LENGTH: 6 M; WALL THICKNESS: SCHEDULE 10S; END TYPE: PLAIN	m	12
585944	PIPE, METALLIC: NOMINAL PIPE SIZE DESIGNATION: 100 MM; MATERIAL: STAINLESS STEEL; LENGTH: 6 M; SCHEDULE: 10S; CONSTRUCTION: STRAIGHT; END TYPE: BUTT WELD; MAXIMUM OPERATING PRESSURE: 100 KPA; APPLICATION: SULPHURIC ACID	m	24

Material number	Description	UOM	Contract amount for 4 years
576282	PIPE, METALLIC: NOMINAL PIPE SIZE DESIGNATION: 250 MM; MATERIAL: CARBON STEEL; LENGTH: 6 M; SCHEDULE: 20; END TYPE: FLANGE; MAXIMUM OPERATING TEMP: 30 DEG C; RATING 10 BAR; SPECIFICATION: ASME B36.10; FLANGED AND DRILLED ACCORDING TO BS 1092-1 TABLE 12	ea	6
661373	PIPE, METALLIC: NOMINAL PIPE SIZE DESIGNATION: 10 MM; MATERIAL: CARBON STEEL BS 1501 224 490A; LENGTH: 6 M; WALL THICKNESS: 5 MM; END TYPE: FLANGE	ea	5
661371	PIPE, NON-METALLIC: NOMINAL SIZE 110 MM; MATERIAL: HDPE; LENGTH: 30 M; STANDARD DIAMETER RATIO: SDR 26; RATING: 5 BAR, PIPE MUST CONFORM TO SANS 4427	ea	5
661366	PIPE, METALLIC: NOMINAL PIPE SIZE: 50 MM; MATERIAL: CARBON STEEL BS1501 224 490A; LENGTH: 6 M; WALL THICKNESS: SCHEDULE 80	ea	10
250927	PIPE, METALLIC: NOMINAL PIPE SIZE DESIGNATION: 25 MM; MATERIAL: STEEL GALVANISED; LENGTH: 6 M; END TYPE: PLAIN; MAXIMUM OPERATING PRESSURE: 10 BAR; PIPE MUST CONFORM TO SANS 62	ea	12
250928	PIPE, METALLIC: NOMINAL PIPE SIZE DESIGNATION: 15 MM; MATERIAL: STEEL GALVANISED; LENGTH: 6 M; END TYPE: PLAIN; MAXIMUM OPERATING PRESSURE: 10 BAR; PIPE MUST CONFORM TO SANS 62	ea	20
250929	PIPE, METALLIC: NOMINAL PIPE SIZE DESIGNATION: 50 MM; MATERIAL: STEEL GALVANISED; LENGTH: 6 M; END TYPE: PLAIN; MAXIMUM OPERATING PRESSURE: 10 BAR; PIPE MUST CONFORM TO SANS 62	ea	20
253074	PIPE, METALLIC: NOMINAL PIPE SIZE DESIGNATION: 3/4 IN; MATERIAL: STEEL GALVANISED; LENGTH: 6 M; END TYPE: THREADS; MAXIMUM OPERATING PRESSURE: 10 BAR; PIPE MUST CONFORM TO SANS 62 AND BSP THREAD CHART	ea	15
253073	PIPE, METALLIC: NOMINAL PIPE SIZE DESIGNATION: 1-1/2 IN; MATERIAL: STEEL GALVANISED; LENGTH: 6 M; END TYPE: THREADS; MAXIMUM OPERATING PRESSURE: 10 BAR; PIPE MUST CONFORM TO SANS 62 AND BSP THREAD CHART	ea	41
253072	PIPE, METALLIC: NOMINAL PIPE SIZE DESIGNATION: 1/4 IN; MATERIAL: STEEL GALVANISED; LENGTH: 6 M; END TYPE: THREADS; MAXIMUM OPERATING PRESSURE: 10 BAR; PIPE MUST CONFORM TO SANS 62 AND BSP THREAD CHART	ea	5

Material number	Description	UOM	Contract amount for 4 years
252877	PIPE LEAK CLAMP REPAIR, METALLIC; MATERIAL: STAINLESS STEEL; LENGTH: 150 MM; TWO BOLTS FOR TENSIONING; PIPE NB 80MM; CLAMP RUBBER LINED; CLAMP RANGE 87 - 93MM	ea	30
252952	PIPE LEAK CLAMP REPAIR, METALLIC: NOMINAL PIPE SIZE : 100 MM; MATERIAL: STAINLESS STEEL; LENGTH: 200 MM; TWO BOLTS FOR TENSIONING; CLAMP SIZE: 110MM; CLAMP RUBBER LINED; CLAMP RANGE 103 -113MM	ea	60
252948	PIPE LEAK CLAMP REPAIR, METALLIC; MATERIAL: STAINLESS STEEL; LENGTH: 200 MM; TWO BOLTS FOR TENSIONING; PIPE NB 150MM; CLAMP RUBBER LINED; CLAMP RANGE 165 - 176MM	ea	50
252949	PIPE LEAK CLAMP REPAIR, METALLIC; MATERIAL: STAINLESS STEEL; LENGTH: 300 MM; TWO BOLTS FOR TENSIONING; PIPE NB 200MM; CLAMP RUBBER LINED; CLAMP RANGE 218 - 228MM	ea	95
252950	PIPE LEAK CLAMP REPAIR, METALLIC; MATERIAL: STAINLESS STEEL; LENGTH: 300 MM; TWO BOLTS FOR TENSIONING; PIPE NB: 250MM; CLAMP RUBBER LINED; CLAMP RANGE 271 - 281MM	ea	30
252951	PIPE LEAK CLAMP REPAIR, METALLIC: NOMINAL PIPE SIZE: 300 MM; MATERIAL: STAINLESS STEEL; LENGTH: 500 MM; TWO BOLTS FOR TENSIONING; CLAMP SIZE: 325MM; CLAMP RUBBER LINED; CLAMP RANGE 320 - 330MM	ea	30
641757	PIPE, METALLIC: NOMINAL PIPE S: 25 MM; MATERIAL: STAINLESS STEEL; GRADE: A312 TP316/316L; LENGTH: 6 M; CONSTRUCTION: SEAMLESS; END TYPE: BUTT WELD; SCHEDULE: SCH40; GRADE: A312 TP316/316L	ea	60
556668	PIPE, METALLIC: NOMINAL PIPE SIZE DESIGNATION: 1/4 IN; MATERIAL: CU; LENGTH: 150 MM; END TYPE: PLAIN; SOFT DRAWN COPPER PIPE; MUST CONFORM TO BS EN 12735-1; RATED FOR R410A GAS REFRIGERANT	m	400
563029	REDUCER, PIPE: TYPE: CONCENTRIC; NOMINAL SIZE: 250 X 200 MM; CONNECTION: NPT X FNPT; MATERIAL: CARBON STEEL; SPECIFICATION: SANS719; MAXIMUM OPERATING PRESSURE: 16 BAR; STRUCTURE: SEAMLESS; SCHEDULE: 40	ea	60

Material number	Description	UOM	Contract amount for 4 years
563030	REDUCER, PIPE: TYPE: CONCENTRIC; NOMINAL SIZE: 300 X 250 MM; CONNECTION: NPT X FNPT; MATERIAL: CARBON STEEL; SPECIFICATION: SANS719; MAXIMUM OPERATING PRESSURE: 16 BAR; STRUCTURE: SEAMLESS; SCHEDULE: 40	ea	64
608397	REDUCER, PIPE: TYPE: CONCENTRIC; NOMINAL SIZE: 50 X 25 MM; CONNECTION: BW; MATERIAL: STAINLESS STEEL GR 316; MAXIMUM OPERATING PRESSURE: 16 BAR; STRUCTURE: SEAMLESS; SCHEDULE: 40	ea	48
239252	REDUCER, PIPE: NOMINAL SIZE: 25 X 15 MM; CONNECTION: FNPT; MATERIAL: GALVANISED STEEL; FITTING MUST CONFORM TO SANS 62	ea	150
239251	REDUCER, PIPE: NOMINAL SIZE: 25 X 20 MM; CONNECTION: FNPT; MATERIAL: GALVANISED STEEL; FITTING MUST CONFORM TO SANS 62	ea	150
528368	BEND, PIPE: MATERIAL: MILD STEEL; DEGREE: 90 DEG; SPECIFICATION: SANS 719; MAXIMUM OPERATING PRESSURE: 16 BAR; NB 250 MM; SCHEDULE: 20	ea	192
528369	BEND, PIPE: MATERIAL: MILD STEEL; DEGREE: 45 DEG; SPECIFICATION: SANS 62; NB 100MM; MAXIMUM OPERATING PRESSURE: 16 BAR; SCHEDULE: 20	ea	28
528366	BEND, PIPE: MATERIAL: MILD STEEL; CONNECTION: NPT; DEGREE: 90 DEG; RADIUS: LONG; NB 100NB; SPECIFICATION: ASME B36.10; SCHEDULE: 40	ea	150
528363	ELBOW: SIZE: NB 90 MM; CONNECTION: FLANGE; MATERIAL: STAINLESS STEEL; DEGREE: 90 DEG; SPECIFICATION: ASME B36.10; SCHEDULE: 40	ea	72
528365	BEND, PIPE: NB 80NB; CONNECTION: FNPT; MATERIAL: MILD STEEL; DEGREE: 45; RADIUS: LONG; SPECIFICATION: ASME B36.10; SCHEDULE: 40	ea	56
61712	BEND, PIPE: OUTSIDE DIAMETER: 50 MM; CONNECTION: BUTT WELD; MATERIAL: STAINLESS STEEL; DEGREE: 90 DEG; RADIUS: LONG; GRADE: 316L; SCHEDULE: 40; TYPE: SEAMLESS	ea	15
585943	ELBOW, PIPE: SIZE: NB 100 MM; CONNECTION: BW; MATERIAL: STAINLESS STEEL; DEGREE: 90; RADIUS: LONG; SPECIFICATION: ASME 36.10; SCHEDULE: 10	ea	60

Material number	Description	UOM	Contract amount for 4 years
608639	PIPE BEND, METALLIC: DIAMETER: NB 250 MM; CONNECTION: PLAIN; MATERIAL: CARBON STEEL; GRADE: B ASTM A106; DEGREE: 40; SEAMLESS; SPECIFICATION: ASME B36.10; SCHEDULE: 40	ea	30
608637	PIPE BEND, METALLIC: DIAMETER: NB 250 MM; CONNECTION: PLAIN; MATERIAL: CARBON STEEL; GRADE: B ASTM A106; DEGREE: 90; SEAMLESS; SPECIFICATION: ASME B36.10; SCHEDULE: 40	ea	30
608638	PIPE BEND, METALLIC: DIAMETER: NB 250 MM; CONNECTION: PLAIN; MATERIAL: CARBON STEEL; GRADE: B ASTM A106; DEGREE: 90; LONG RADIUS; SEAMLESS; SPECIFICATION: ASME B36.10; SCHEDULE: 40	ea	30
252521	ELBOW, PIPE REDUCER: SIZE: 1 X 1/2 IN; CONNECTION: FNPT; MATERIAL: STEEL GALVANISED; DEGREE: 90 DEG; RATING: 10 BAR; FITTING MUST CONFORM TO SANS 62 and BSP THREADS CHART	ea	30
253068	ELBOW, PIPE: SIZE: 3/4 IN; CONNECTION: FNPT; MATERIAL: STEEL GALVANIZED; DEGREE: 90 DEG; RATING: 10 BAR; FITTING MUST CONFORM TO SANS 62 and BSP THREADS CHART	ea	25
253070	ELBOW, PIPE: SIZE: 1-1/4 IN; CONNECTION: FNPT; MATERIAL: STEEL GALVANIZED; DEGREE: 90 DEG; RATING: 10 BAR; FITTING MUST CONFORM TO SANS 62 and BSP THREADS CHART	ea	20
253071	ELBOW, PIPE: SIZE: 1/2 IN; CONNECTION: FNPT; MATERIAL: STEEL GALVANIZED; DEGREE: 90 DEG; RATING: 10 BAR; FITTING MUST CONFORM TO SANS 62 and BSP THREADS CHART	ea	60
253066	ELBOW, PIPE: SIZE: 1-1/2 IN; CONNECTION: FNPT; MATERIAL: STEEL GALVANIZED; DEGREE: 90 DEG; RATING: 10 BAR; FITTING MUST CONFORM TO SANS 62 and BSP THREADS CHART	ea	15
253067	ELBOW, PIPE: SIZE: 2 IN; CONNECTION: FNPT; MATERIAL: STEEL GALVANIZED; DEGREE: 90 DEG; RATING: 10 BAR	ea	40
253069	ELBOW, PIPE: SIZE: 1 IN; CONNECTION: FNPT; MATERIAL: STEEL GALVANIZED; DEGREE: 90 DEG; RATING: 10 BAR; FITTING MUST CONFORM TO SANS 62 and BSP THREADS CHART	ea	700

Material number	Description	UOM	Contract amount for 4 years
60114	ELBOW, PIPE: SIZE: NOMINAL SIZE 25MM; DEGREE: 90 DEG; MATERIAL: STEEL GALVANISED; RATING: 10 BAR; FITTING MUST CONFORM TO SANS 62	ea	4
253096	TEE, PIPE: SIZE: 1/2 IN; CONNECTION: FNPT; MATERIAL: STEEL GALVANISED; RATING: 10 BAR; FITTING MUST CONFORM TO SANS 62 and BSP THREADS CHART	ea	15
253097	TEE, PIPE: SIZE: 3/4 IN; CONNECTION: FNPT; MATERIAL: STEEL GALVANISED; RATING: 10 BAR; FITTING MUST CONFORM TO SANS 62 and BSP THREADS CHART	ea	20
253098	TEE, PIPE: SIZE: 1/4 IN; CONNECTION: FNPT; MATERIAL: STEEL GALVANISED; RATING: 10 BAR; FITTING MUST CONFORM TO SANS 62 and BSP THREADS CHART	ea	30
253099	TEE, PIPE: SIZE: 1 IN; CONNECTION: FNPT; MATERIAL: STEEL GALVANISED; RATING: 10 BAR; FITTING MUST CONFORM TO SANS 62 and BSP THREADS CHART	ea	30
253100	TEE, PIPE: SIZE: 1-1/2 IN; CONNECTION: FNPT; MATERIAL: STEEL GALVANISED; RATING: 10 BAR; FITTING MUST CONFORM TO SANS 62 and BSP THREADS CHART	ea	40
253101	TEE, PIPE: SIZE: 2 IN; CONNECTION: FNPT; MATERIAL: STEEL GALVANISED; RATING: 10 BAR; FITTING MUST CONFORM TO SANS 62 and BSP THREADS CHART	ea	40
57288	UNION, PIPE: NOMINAL SIZE: 15 MM; CONNECTION: FPT; MATERIAL: STEEL; FITTING MUST CONFORM TO SANS 62	ea	10
57297	UNION, PIPE: NOMINAL SIZE: 20 MM; CONNECTION: FBSP; MATERIAL: STEEL; FITTING MUST CONFORM TO SANS 62	ea	50
232072	UNION, PIPE: NOMINAL SIZE: 50MM; CONNECTION: GLUE X THREADS; MATERIAL: PVC; RATING: 10 BAR; GRADE: A; CLASS 9, NOTE: - CONNECTION ONE SIDE MUST HAVE THREADS AND THE OTHER MUST BE GLUED	ea	85
253090	UNION, PIPE: NOMINAL SIZE: 1 IN; CONNECTION: FNPT THREAD; MATERIAL: STEEL GALVANISED; RATING: 10 BAR; FITTING MUST CONFORM TO SANS 62 and BSP THREAD CHART	ea	400
253091	UNION, PIPE: NOMINAL SIZE: 2 IN; CONNECTION: FNPT THREAD; MATERIAL: STEEL GALVANISED; RATING: 10 BAR; FITTING MUST CONFORM TO SANS 62 and BSP THREAD CHART	ea	30

Material number	Description	UOM	Contract amount for 4 years
253092	UNION, PIPE: NOMINAL SIZE: 1/4 IN; CONNECTION: FNPT THREAD; MATERIAL: STEEL GALVANISED; RATING: 10 BAR; FITTING MUST CONFORM TO SANS 62 and BSP THREAD CHART	ea	10
253087	UNION, PIPE: NOMINAL SIZE: 1-1/2 IN; CONNECTION: FNPT THREAD; MATERIAL: STEEL GALVANISED; RATING: 10 BAR; FITTING MUST CONFORM TO SANS 62 and BSP THREAD CHART	ea	80
253088	UNION, PIPE: NOMINAL SIZE: 3/4 IN; CONNECTION: FNPT THREAD; MATERIAL: STEEL GALVANISED; RATING: 10 BAR	ea	35
57345	NIPPLE, PIPE: TYPE: BARREL; NOMINAL SIZE: 15 MM; LENGTH: 51 MM; CONNECTION: THREADS; MATERIAL: GALVANISED STEEL; RATING: 10 BAR; FITTING MUST CONFORM TO SANS 62 and BSP THREAD CHART	ea	600
756543	NIPPLE, PIPE: TYPE HEX; NOMINAL SIZE: 20 MM; LENGTH: 50 MM; CONNECTION: THREADS; MATERIAL: GALVANISED STEEL; FITTING MUST CONFORM TO SANS 62	ea	800
756619	NIPPLE, PIPE: TYPE HEX; NOMINAL SIZE: 25 MM; LENGTH: 50 MM; CONNECTION: THREADS; MATERIAL: GALVALNISED STEEL; FITTING MUST CONFORM TO SANS 62	ea	700
756633	NIPPLE, PIPE: TYPE HEX; NOMINAL SIZE: 40 MM; LENGTH: 75 MM; CONNECTION: THREADS; MATERIAL: GALVANISED STEEL; FITTING MUST CONFORM TO SANS 62	ea	350
756634	NIPPLE, PIPE: TYPE HEX; NOMINAL SIZE: 50 MM; LENGTH: 75 MM; CONNECTION: THREADS; MATERIAL: GALVANISED STEEL; FITTING MUST CONFORM TO SANS 62	ea	600
598800	FLANGE, PIPE: TYPE: WELD ON; BORE: NB 300 MM; MATERIAL: MILD STEEL; STYLE: FLAT FACED; SPECIFICATION: SANS 1123; RATING: 10 BAR	ea	1407
256426	FLANGE, PIPE: TYPE: WELD ON; BORE: NB 300 MM; MATERIAL: MILD STEEL; STYLE: LAPPED FACE; SPECIFICATION: SANS 1123; RATING: 10 BAR	ea	1207
599698	FLANGE: TYPE: WELD ON; DIMENSIONS: ID 323.9 X OD 457.2 X THK 19 MM; MATERIAL: STEEL; STYLE: LAPPED FACE; RATING: 10 BAR; SPECIFICATION: BS 10T-D; PCD 406.4 MM; HOLES (12) 22.2 MM; ASH LINE PIPE FLANGE 406 MM	ea	250

Material number	Description	UOM	Contract amount for 4 years
606428	FLANGE: TYPE: LAPPED FACE; DIMENSIONS: ID 327 X OD 528 X THK 22 MM; MATERIAL: MS; NUMBER OF HOLES: 12; HOLE DIAMETER: 24 MM; PCD: 470 MM	ea	120
629164	FLANGE, PIPE: TYPE: WELD ON; BORE: NB 250 MM; MATERIAL: MILD STEEL; STYLE: LAPPED FACE; SPECIFICATION: SANS 1123; RATING: 16 BAR	ea	100
636824	FLANGE, PIPE: TYPE: WELD ON; BORE: NB 250 MM; MATERIAL: MILD STEEL; STYLE: LAPPED FACE; SPECIFICATION: SANS 1123; RATING: 16 BAR	ea	100
669955	FLANGE, PIPE: TYPE: WELD ON; BORE: NB 250 MM; MATERIAL: MILD STEEL; STYLE: LAPPED FACE; SPECIFICATION: SANS 1123; RATING: 16 BAR	ea	1000
635594	FLANGE, PIPE: TYPE: WELD ON; BORE: NB 250 MM; MATERIAL: MILD STEEL; STYLE: LAPPED FACE; SPECIFICATION: SANS 1123; RATING: 16 BAR	ea	100
685015	FLANGE, PIPE: TYPE: WELD ON; BORE: NB 100 MM; MATERIAL: MILD STEEL; STYLE: LAPPED FACE; SPECIFICATION: SANS 1123; RATING: 16 BAR	ea	150
623468	FLANGE, PIPE: TYPE: WELD ON; BORE: NB 100 MM; MATERIAL: MILD STEEL; STYLE: LAPPED FACE; SPECIFICATION: SANS 1123; RATING: 16 BAR	ea	250
707201	FLANGE, PIPE: TYPE: WELD ON; BORE: NB 400 MM; MATERIAL: MILD STEEL; STYLE: LAPPED FACE; SPECIFICATION: SANS 1123; RATING: 16 BAR	ea	690
554699	FLANGE: TYPE: SLIP ON; MATERIAL: STAINLESS STEEL; STYLE: DRILLED TO SUIT 2IN PIPE; RATING: BS 10 - TABLE D; GRADE: 316L; INSPECTION CERTIFICATE 3.2; CERTIFIED EN10204:2004	ea	10
528995	FLANGE; NOMINAL PIPE SIZE: 150MM; MATERIAL: STAINLESS STEEL GR 316; RATING: 6 BAR; TYPE: WELD ON; FLANGED AND DRILLED ACCORDING TO BS 1092-1 TABLE 12	ea	20
528996	FLANGE, PIPE: TYPE: WELD ON; BORE: NB 65 MM; MATERIAL: MILD STEEL; STYLE: LAPPED FACE; SPECIFICATION: SANS 1123; RATING: 16 BAR	ea	420
528997	FLANGE; NOMINAL PIPE SIZE: 125MM; TYPE: MOUNTING; MATERIAL: STAINLESS STEEL GR 316; RATING: 6 BAR; TYPE: WELD ON; FLANGED AND DRILLED ACCORDING TO BS 1092-1 TABLE 12	ea	10

Material number	Description	UOM	Contract amount for 4 years
741976	FLANGE, PIPE: TYPE: WELD ON; BORE: NB 25 MM; MATERIAL: MILD STEEL; STYLE: LAPPED FACE; SPECIFICATION: SANS 1123; RATING: 16 BAR	ea	160
248376	COUPLING, PIPE: NOMINAL SIZE: 150MM; CONNECTION: COMPRESSION; MATERIAL: MILD STEEL; OUTSIDE DIAMETER RANGE: 150-165 MM; FITTING TO BE SUPPLIED AS PER SAN 1808-2	ea	27
625034	COUPLING, PIPE: SIZE: 159-182 MM; CONNECTION: SLIP ON; MATERIAL: STL/UPVC; RATING: 16 BAR; MEDIA FOR WHICH DESIGNED: WATER	ea	60
625377	COUPLING, PIPE: SIZE: 230-247 MM; CONNECTION: SLIP ON; MATERIAL: STL/UPVC; RATING: 16 BAR; MEDIA FOR WHICH DESIGNED: WATER	ea	28
629165	COUPLING, PIPE: SIZE: 250-265 MM; CONNECTION: SLIP ON; MATERIAL: STL/UPVC; RATING: 16 BAR; COLOR CODING: RED; MEDIA FOR WHICH DESIGNED: WATER	ea	28
231665	COUPLING: TYPE: JOHNSON; PIPE SIZE: NB 300 X LG 300 MM; MATERIAL: STEEL; COUPLING RANGE: 315 - 328 MM	ea	3000
554194	CLAMP, PIPE REPAIR: PIPE SIZE: 350 MM; MATERIAL: STAINLESS STEEL; PRESSURE RATING: 16 BAR; MANUF P/N: TUC1-0361-40; WIDTH: 500 MM/600 MM; TWO BOLTS FOR TENSIONING; CLAMP RUBBER LINED WITH HIGH PRESSURE RUBBER NO: 2008/05746; RANGE: 356-366 MM	ea	80
593070	CLAMP, HOSE: TYPE: CLIP; COMMERCIAL SIZE 150 MM; WIDTH: 30 MM; MATERIAL: STAINLESS STEEL; FASTENING DEVICE TYPE: BOLT/NUT; OUTSIDE DIAMETER RANGE: 150 TO 170MM	ea	140
588425	COUPLING, PIPE: NOMINAL SIZE: 250MM; CONNECTION: BOLTED; MATERIAL: CAST IRON; SPECIFICATION: AWWA C219-01; STYLE: KLAMFLEX RANGER END CAP; COLOR CODING: BLUE; MEDIA FOR WHICH DESIGNED: POTABLE WATER; OUTSIDE DIAMETER RANGE: 250-267 MM; FITTING TO BE SUPPLIED AS PER SAN 1808-2	ea	5
248396	COUPLING, PIPE: NOMINAL SIZE: 150 MM; CONNECTION: CLAMP; MATERIAL: CAST IRON; OUTSIDE DIAMETER RANGE: 159-182 MM; FITTING TO BE SUPPLIED AS PER SAN 1808-2	ea	18

Material number	Description	UOM	Contract amount for 4 years
248377	COUPLING, PIPE: NOMINAL SIZE: 200MM; CONNECTION: COMPRESSION; MATERIAL: MILD STEEL; OUTSIDE DIAMETER RANGE: 218-235 MM; FITTING TO BE SUPPLIED AS PER SAN 1808-2	ea	14
648646	COUPLING, HOSE: NOMINAL SIZE: 50 MM; CONNECTION: MALE ADAPTOR X FEMALE COUPLER; MATERIAL: ALLUMINIUM; TYPE: CAMLOCK	ea	8
257012	CLAMP, HOLDING: CLAMP MATERIAL: STEEL GALVANISED; TAP SIZE: 2 IN; APPLICATION SPLIT COUPLING CW EPDM & GASKET	ea	15
257016	CLAMP, HOLDING: CLAMP MATERIAL: STEEL GALVANISED; TAP SIZE: 3 IN; APPLICATION SPLIT COUPLING CW EPDM & GASKET;	ea	10
612127	CLAMP, TUBE: TYPE: RUBBER LINED; COMMERCIAL SIZE: 180 MM; MATERIAL: STAINLESS STEEL; APPLICATION: FIBRE CEMENT PIPES; LENGTH: 300 MM; RANGE: 180-194 MM	ea	3
612128	CLAMP, TUBE: TYPE: RUBBER LINED; COMMERCIAL SIZE: 188 MM; MATERIAL: STAINLESS STEEL; APPLICATION: FIBRE CEMENT PIPES; LENGTH: 300 MM; RANGE: 180- 194 MM	ea	2
576277	BELLOWS, PRESSURE: TYPE: HYDRO FORMED; PRESSURE RANGE: 16 BAR; MATERIAL: STAINLESS STEEL; DIMENSIONS: DIA 300 MM; APPLICATION: ASH PUMP DISCHARGE; END CONNECTION TYPE: FLANGE BS10/D; FLANGE THK: 35MM; FACE TO FACE: 260MM; BENNOX INSERT AND THREE ADJUSTABLE TIRODS MUST BE SUPPLIED	ea	93
598801	BELLOWS, PRESSURE: TYPE: HYDRO FORMED; PRESSURE RANGE: 16 BAR; MATERIAL: STAINLESS STEEL; END CONNECTION TYPE: FLANGE; WITH BENNOX INSERTAND THREE ADJUSTABLE TIRODS; FLANGE: FACE TO FACE 225 MM; PCD 355 MM; 12 X 26 MM HOLE SIZE; FLANGE 30 MM THK; SANS 1123-1600/3; ASH PUMP BOTTOM BELLOWS	ea	120
562731	U BOLT: PIPE SIZE: NB 300 MM; DIAMETER: M16; LOAD RATING: 695 KG; INSIDE LENGTH: 380 MM; THREAD LENGTH: 80 MM; THREAD: 1.5 MM; MATERIAL: STL; INSIDE WIDTH: 353 MM	ea	580

Material number	Description	UOM	Contract amount for 4 years
605772	U BOLT: NOMINAL SIZE: 8 MM; PIPE OD: 34 MM; LOAD RATING: 1.3 KNM; INSIDE LENGTH: 68 MM; INSIDE WIDTH: 36 MM; THREAD LENGTH: 30 MM; THREAD: LH; MATERIAL: GALVANISED STEEL	ea	15

A.2 Ash Line Y Piece 0.36/21209

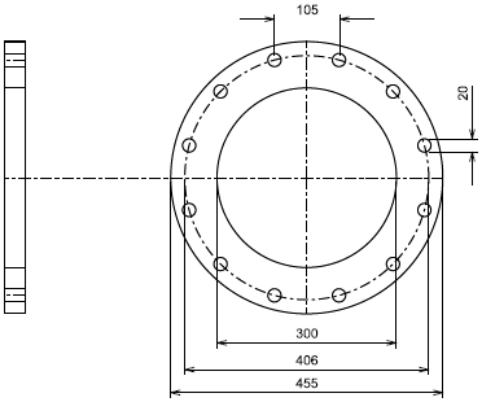

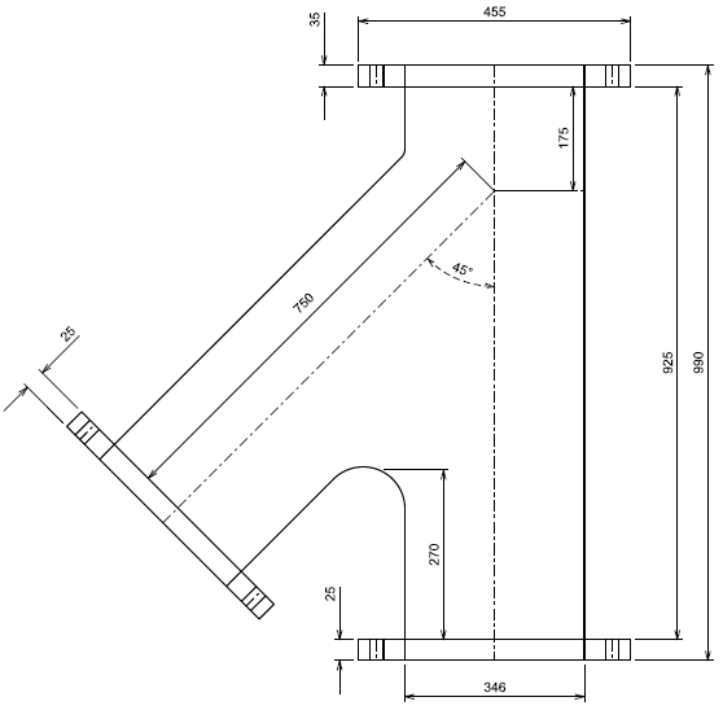

DESIGN NOTES:

1 MINIMUM OPERATING PRESSURE 16 bar
2 MINIMIM OPERATING TEMP 23 deg c
3 CONSTRUCTION: CASTING
4 ASH PIPE OD 346
5 ASH PIPE ID 300
6 SPECIFICATION: CAST IRON - 27% CROME
7 FLANGE 1 OF 35 AND 2 OF 25
8 HOLS 12 OF
9 BOLTS M18
10 PCD 406

	0		FIRST ISSUE		SAF	O.T	M.M.N			
D.O.	REV	DATE	** REVISION ** INDEX REFERENCE : ASH Y PIECE		REV BY	CHKD BY	AUTH BY	KKS APP	0.36/	REFERENCE DRAWINGS
DRG REGISTR			APPROVED BY : M.M NGUBENI							
KKS APP				23/04/2015						
AUTH BY	23/4/15	M.M.N	AUTHORISED O TILODI							
CHKD BY	23/4/15	O.T		23/04/2015						
DRAWN BY	21/4/15	SAF	CAMDEN POWER STATION Y PIECE ON ASH PIPES DETAIL							
SCALE	N.T.S.		Eskom	0.36/21209					SHEET 0	REV 0

CONTROLLED DISCLOSURE

When downloaded from the document management system, this document is uncontrolled and the responsibility rests with the user to ensure it is in line with the authorized version on the system. No part of this document may be reproduced in any manner or form by third parties without the written consent of Eskom Holdings SOC Ltd, © copyright Eskom Holdings SOC Ltd, Reg No 2002/015527/30